Kinghelm®

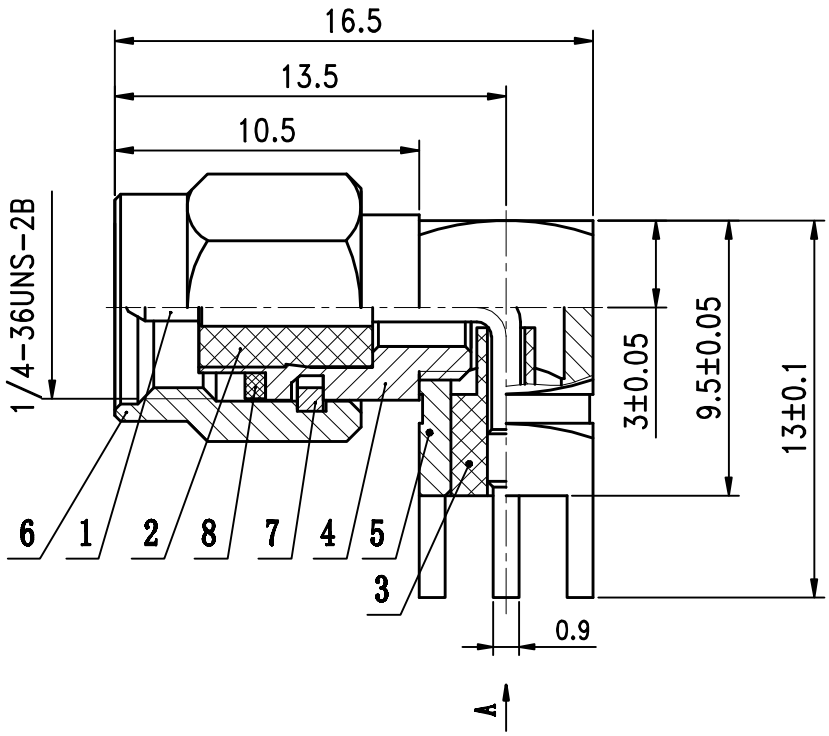

Technical Specifications:

1.During assembly, the product appearance must not be damaged, and the dimensions of the mouth should conform to those shown in the diagram.

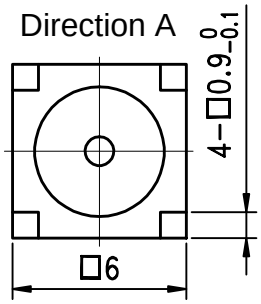

No.	Name	Amt.	Remark
8	Seal Ring	1	Ni5
7	Snap Ring	1	Ni5
6	Thread Insert	1	Ni5
5	Shell	1	Ni5 Universal 017-3B
4	Shell	1	Ni5
3	Insulator	1	Universal 164-2B
2	Insulator	1	Universal 041-2
1	Pin	1	Gold Plating

Mark	Amt.	Change Document Number	Sign	Date

Design	
Audit	
Technology	
Standardization	
Approve	

SMA-JWE-L16.5

Pin Connector

Shenzhen Kinghelm Electronics Co., Ltd

Drawing No.	KH-SMA-JWE16.5		
Stage Marker		Quality	Scale
A			4:1
Page1		Total 1 Page	